KT-FLED-RC-4-W

ROUND COVER PLATE

DESCRIPTION

Round Cover Plate for mounting Flood Lights on 4” Round boxes. Includes Mounting Hardware. White Color.

DIMENSIONS

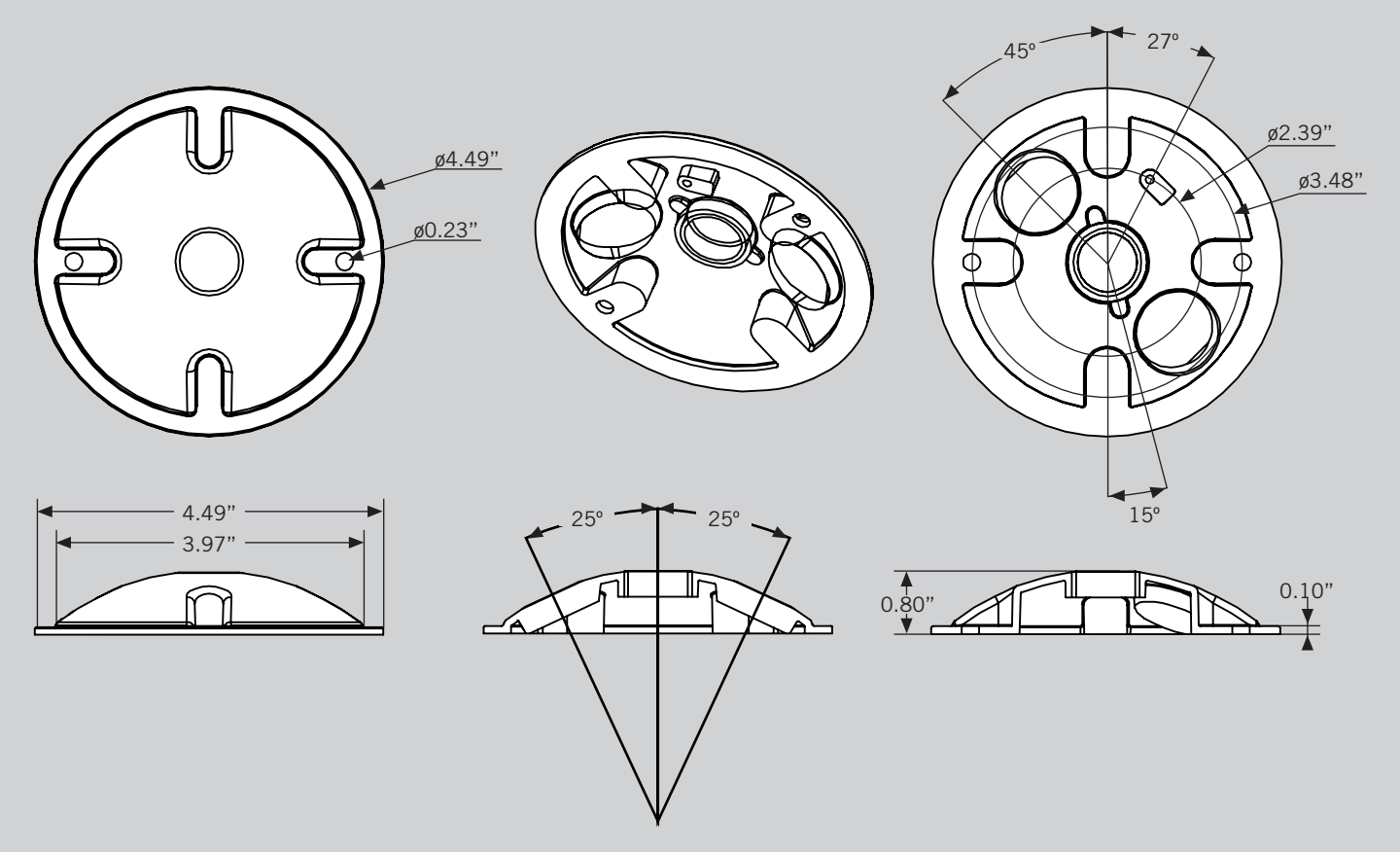

ORDERING INFORMATION

CATALOG NUMBER	CARTON QTY.	EASY CODE	UPC
KT-FLED-RC-4-W	TBD	UER-55	843654129174

CATALOG NUMBER BREAKDOWN

KT-FLED-RC-4-W

1 2 3 4 5 6

1 Keystone Technologies
2 Flood Light
3 LED
4 Round Cover
5 Series 4
6 White